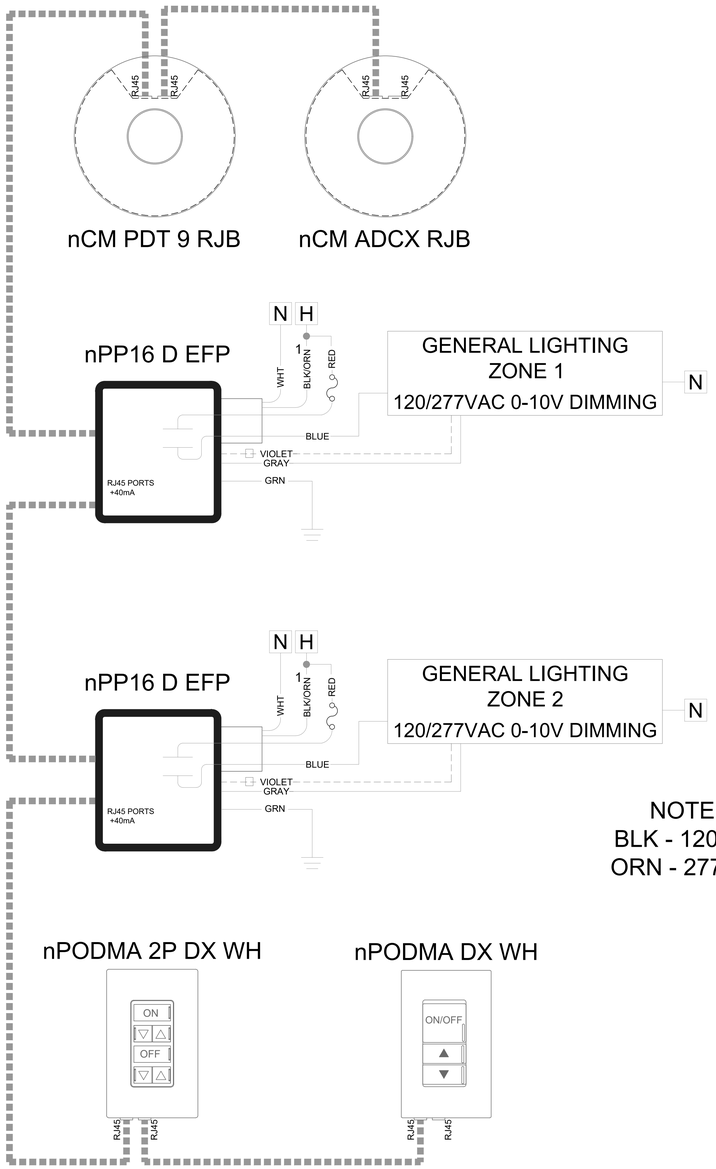

3 OFFICE WITH 2-ZONES, 3-WAY SWITCHING, AND DAYLIGHTING

N.T.S.

DISCLAIMER

THIS ACUITY CONTROLS LAYOUT IS FOR REFERENCE OF PRODUCT LOCATIONS ONLY AND IS NOT INTENDED FOR CONSTRUCTION PURPOSES. PLEASE SEE THE CONSTRUCTION DOCUMENT (E-SHEET) REFERENCED IN THE TITLE BLOCK "DWG REF" SECTION, FOR MORE INFO.

SENSOR FEATURE OPTIONS			
ABBREVATION	DEFINITION	ABBREVATION	DEFINITION
ADC	AUTOMATIC DIMMING CONTROL	PDT	PASSIVE DUAL TECHNOLOGY
D	MANUAL DIMMING	RF	RADIO FREQUENCY
DX	MANUAL DIMMING CONTROL	V	VANDAL RESISTANT
DZ	DUAL ZONE	2P	2 POLE
LV	LOW VOLTAGE	347	347 VOLT
LT	LOW TEMP	4	4 PORT
NL	NIGHT LIGHT	8	8 PORT
P	PHOTOCELL	480	480 VOLT
WALL SWITCHPOD COLOR OPTIONS		SENSOR ACCESSORIES	
ABBREVATION	DEFINITION	NAME	DEFINITION
IV	IVORY	WV BR	WIDE VIEW CEILING MOUNTING BRACKET
GY	GREY	FB1	DEEP FIXTURE BRACKET
WH	WHITE	FB2	DEEP FIXTURE BRACKET WITH HARDWARE
AL	ALMOND		

HILA
HAWAII LIGHTING ASSOCIATES

HILA NLIGHT DEMOS

HAWAII

DRAWING TYPE:
CONTROL LAYOUT \ SUBMITTAL

REV	DATE

Date: 02/06/2024

Scale: NOT TO SCALE

Drawn By: CNC

Quote #:

DWG Ref:
DETAIL 3

Sheet:
LC1.2